

www.fine-tek.com

Electromagnetic Flow Meter

FineTek

Innovation · Quality · Sharing

FLOW MEASUREMENT FIELD

FineTek is the only inspection institution that owns a Class 2 flow test laboratory in Taiwan. With the most professional R&D and Design Team, it can design and develop high-accuracy electromagnetic flow meters. Moreover, it conducts calibration in Class 1 Flow Laboratory of the National Measurement Laboratory (ITRI Measurement Center), so as to guarantee the flow accuracy on the measurement field.

FineTek's flow laboratory has received certification from the Taiwan Accreditation Foundation and conforms to the regulations of international organizations such as ILAC and APALC. It has the complete ability of uncertainty testing and rating for flow test.



TAF

Certificate No. : L3086-180528

財團法人全國認證基金會
Taiwan Accreditation Foundation

Certificate of Accreditation

This is to certify that

Fine Tek Co., Ltd.
Quality Center Testing Laboratory
No.16, Ziqiang St., Tucheng Dist., New Taipei City 236, Taiwan (R.O.C.)

is accredited in respect of laboratory

Accreditation Criteria	:	ISO/IEC 17025:2005
Accreditation Number	:	3086
Originally Accredited	:	June 25, 2015
Effective Period	:	June 25, 2018 to June 24, 2021
Accredited Scope	:	Testing Field, see described in the Appendix

Chung-Lin Wang
President, Taiwan Accreditation Foundation
Date : May 28, 2018

P1, total 2 pages

The Appendix forms an integral part of this Certificate, which shall be invalid when use without the Appendix

Flow inspection lab with TAF certification

Take weighing and parent metering as the foundation for measurement calibration

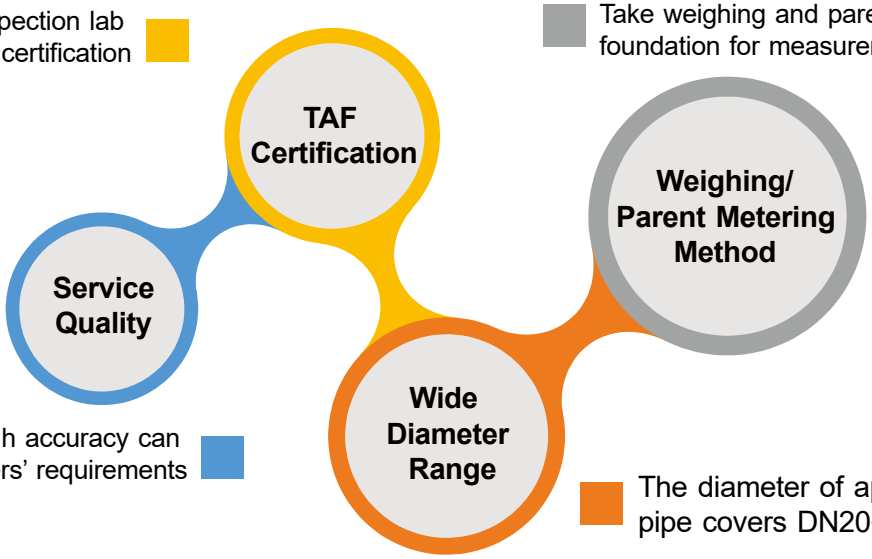

High quality and high accuracy can meet the customers' requirements

The diameter of applicable pipe covers DN20~500

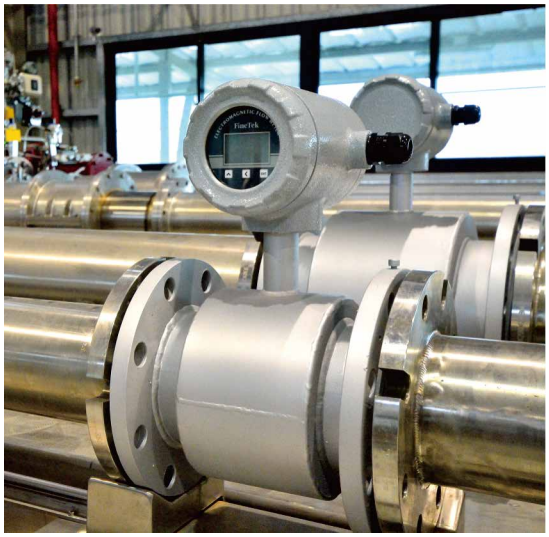



FLOW MEASUREMENT FIELD



PUMP equipment
(The maximum horsepower is 110KW per unit)



Weighing equipment



Control room & Graphical HMI





Piping system I
(Max capacity for four meters calibration simultaneously in above system.)



Piping system II
(Maximum diameter is 500mm)



The exclusive report
(Each flow meter has its own calibration report)

ELECTROMAGNETIC FLOW METER

EPD electromagnetic flow meter is a high-accuracy flow meter manufactured based on the latest international technology. It is widely applied in papermaking, chemical industry, metallurgical industry, drainage, waste water treatment, liquid high-pressure metering, medical care, food, and environmental protection industries.

It is used to measure the non-magnetic liquid and plasma in the enclosed pipe.

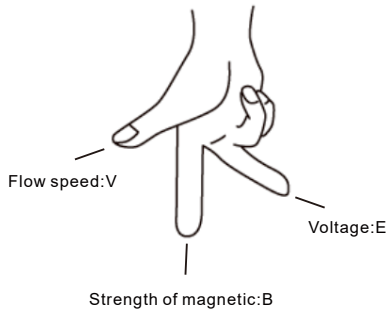

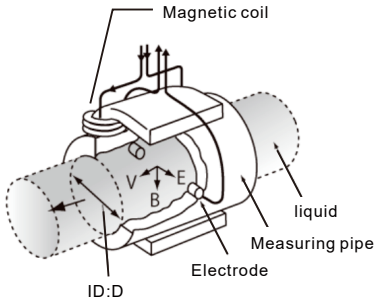

WORKING PRINCIPLE

The working principle of the electromagnetic flow meter is based on the Faraday law of electromagnetic induction. When the conducting liquid flows in the orthogonal direction of the magnetic line direction, it will cut the magnetic lines and generate induced voltage, which shows linear relationship with the flowing speed. Thus, the fluidic volume flow can be calculated.

EPD electromagnetic flow meter is mainly composed of the sensor and transmitter. The measuring tube of the sensor is equipped with the excitation coils upward and downward. The transmitter supplies the excitation current, which generates the magnetic field which goes through the measuring tube once it is powered on. A pair of induction electrodes installed on the inner side of the measuring tube comes in contact with the liquid to guide the induced voltage to the sensor.

APPLICATIONS

- Waste water treatment
- Tapped water purification
- Sewerage
- Sea water desalination module
- Dyeing machines
- Solar energy and PCB wet processing
- Food manufacturing
- Pharmaceutical machines

FEATURES

Low impact on environmental matter

- The measurement results are not affected by the change in liquid density, viscosity, temperature, pressure and conductivity.
- It can be widely applied in the conducting liquids that may contain fiber, solid granules and suspended matters.
- Enclosure protection rating: IP67/NEMA 4X

Wide measurement range & high efficiency

- The wide measurement turndown ratio can be reach 1:100, which can be set randomly and achieve high accuracy for small flow measurement.
- Highly-integrated backlit display of two rows, dual isolation, parameter setting, menu-type operation, memory function, reliable programming, password lock and access, small signal elimination, non-linear correction and two-way measurement.
- Various outputs: Current output 4~20mA, frequency output 2~8KHz and RS485 communication.

Multiple self-diagnosis function

- Power-saving and low fault rate: The measuring tube is without baffle and movable parts, so it won't cause pressure loss and jam.
- Smart self-detection and self-diagnosis function, as well as various alarms

The low installation cost

- It is easy-to-install with low requirements for the straight tube section (Front 5D and rear 2D)

IECEx ,CSA Explosion proof(EPD30)

Available for records for parameter modifications, boot/ shut down device(Option)

Authority management is available in menu (Option)

SPECIFICATION

Item	EPD30 Standard type	EPD34 Remote type
Display	LCM 128*64 pixel backlit type	
Buttons	Tri-button operation	
Communication interface	RS-485 (Modbus)	
Accuracy	±0.5% of reading@1m/s(0.2% optional)	
Medium temperature	-20 ~ 120 °C(PTFE Lining)	
Ambient temperature	-40 ~ 70 °C*(-40 ~ 60 BC applied for Ex proof, as:IECEx)	
Fluidic conductivity	> 5 uS/cm	
Measuring scope	0.1m/s ~ 10m/s	
Current output accuracy	0.1% of Pulse Output Accuracy Temperature coefficient (100ppm/°C)	
Operating pressure	16 Kg/cm^2 (Please contact FineTek if pressure requested more than16 Kg/cm2)	
Current output mode	Proactive	
Analog output	4 ~ 20mA	
Maximum load of current output	< 700W	
Alarming current	3.6mA or 22 mA	
Frequency output scope	2 ~ 8 KHz	
Pulse width	Automatic (pulse width 50%)	
Pulse mode	Isolated NPN Transistor output 32vdc/200mA	
Time constant	1~100 s	
Control output (DO)	Isolated NPN Transistor output 32vdc/200mA; 2-CH	
Control input (DI)	Dry contact ON< 200W ; 1,000W< OFF ; 1-CH	
Data logger(Option)	500 items. With calendar (Internal battery: Lift time>6 month)	
Baud rate	1200 ~ 57600 bps	
Protection rating	IP67 / NEMA 4X	IP68**(Transducer) IP67/ NEMA 4X (Transmitter)
Enclosure material	Aluminum alloy	
Input power	AC 100~240V or DC 24V(Appled for Exproof, as IECEx ,CSA)	
Power consumption	< 10W	
Wire inlet specification	1/2"NPTx2	1/2"NPT x 2(Transducer), M20 x 1.5 x 4(Transmitter)
Excitation mode	Pulse DC	
Vibration regulation	MIL-STD-202G-201A:2002	
EMC regulation	IEC/EN 61326-1 Class A table2	
Explosion-Proof mark	Exec IIC T6...T4 Gc	None

*It can't display when LCM is lower than -20℃.
**Continuous immersion in 6 meters of water for up to 48 hours,IP68 protection,optional function.

MATERIAL SELECTION

※Electrode material

Electrode material	Anti-corrosion property
Stainless steel (316L)	It is applied in water, sewage and organic and non-organic corrosive medium.
Hastelloy alloy	It is resistant to the corrosion of the medium mixture of oxidizing acid such as Nitric acid, mixed acid or Sulfuric acid. Moreover, it is resistant to the corrosion of the oxidizing salt such as Fe2+□ $^{Cu}2^{+}$ o^{r} other substances containing oxidants such as the salt solution of hypochlorous acid above the ambient temperature and sea water.
Titanium	It is resistant to the corrosion of sea water, various oxides, salt solution of hypochlorous acid, oxidating acid (including fuming Nitric acid) and organic acid and alkane. It is not resistant to the corrosion of pure reducing acid (such as Sulfuric acid and Hydrochloric acid). However, the anti-corrosion property will be greatly degraded if the acid contains some oxidants.
Tantalum	It has excellent corrosion resistance. Its characteristic is similar to glass. In addition to hydrofluoric acid , nitric acid , alkali, it could resist almost all chemical medium (including boiling hydrochloric acid, nitric acid and sulfuric acid below 175 ℃). It could not resist corrosion in alkali.

※Lining material

Lining material	Main properties	Application scope
PTFE	1. Stable chemical properties, resistant to various acid, alkane, and salt solutions and various organic solvents. It is not tolerant to the corrosion of ClF3, $_{h}$igh-temperature OF3 and high-speed liquid oxygen and ozone. 2. The anti-abrasion property is average.	1. -20~120℃ 2. Strong corrosive medium such as concentrated acid and alkane.
NBR	1. Excellent flexibility, highly tearing force capability, good wear resistance 2. It is resistant to low concentrations of acid, alkali, salt solution;It is not tolerant the corrosion of oxidizing mediums.	1. < 80℃ 2. Neutral-strong wearing mineral pulp, coal slurry and mud slurry
Neoprene	1. Neutral wearing capability 2. It is resistant to low concentrations of acid, alkali, acid corrosion.	1. < 80℃ 2. Water, Industrial water , Seawater

※Inner tube material inside flow meter's body

Material of inner tube	Anti-corrosion property
Stainless steel (304)	For water, sewage or inorganic, organic media which are mildly corrosive

APPEARANCE AND DIMENSION AND FLANGE CONNECTION DIMENSION STANDARD TYPE

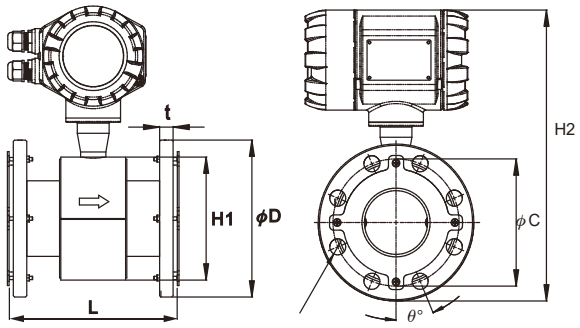

DN15~80

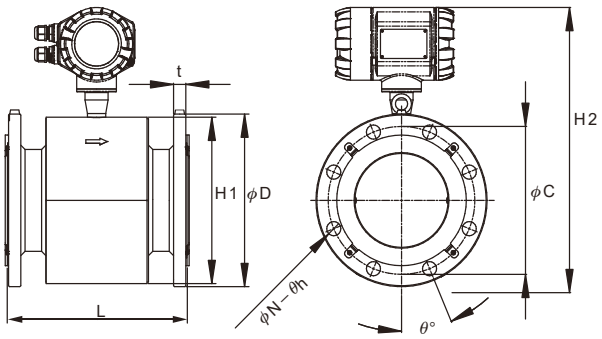

DN100~500

Connection specification		JIS 10K															
Nominal diameter(mm)		15	25	40	50	65	80	100	125	150	200	250	300	350	400	450	500
Lining material		PTFE															
Length	L	200	200	200	200	200	200	250	250	300	350	400	500	500	600	600	600
External diameter	ϕD	95	125	140	155	175	185	210	250	280	330	400	445	490	560	620	675
PCD	ϕC	70	90	105	120	140	150	175	210	240	290	355	400	445	510	565	620
Flange thickness	t	12	14	16	16	18	18	18	20	22	22	24	24	26	28	30	30
Inclined angle of screw hole	θ°	45	45	45	45	45	22.5	22.5	22.5	22.5	15	15	11.25	11.25	11.25	9	9
Diameter of screw hole	θh	15	19	19	19	19	19	19	23	23	23	25	25	25	27	27	27
Quantity of screw holes	N	4	4	4	4	4	8	8	8	8	12	12	16	16	16	20	20
Height of sensor casing	H1	75	88	125	125	145	145	195	195	270	305	365	406	470	530	580	630
Total height	H2	267	289	315	322	342	347	385	405	467	506	572	616	675	737	769	818
Weight (kg)		5	6.8	6.8	7.7	9	9.9	12.9	17.5	23.5	33.2	54	69.6	88.4	109.3	--	--

Connection specification		JIS 20K											
Nominal diameter(mm)		15	25	40	50	65	80	100	125	150	200	250	300
Lining material		PTFE											
Length	L	200	200	200	200	200	200	250	250	300	350	400	500
External diameter	ϕD	95	125	140	155	175	200	225	270	305	350	430	480
PCD	ϕC	70	90	105	120	140	160	185	225	260	305	380	430
Flange thickness	t	14	16	18	18	20	22	24	26	28	30	34	36
Inclined angle of screw hole	θ°	45	45	45	22.5	22.5	22.5	22.5	22.5	15	15	15	11.25
Diameter of screw hole	θh	15	19	19	19	23	23	23	25	25	25	27	27
Quantity of screw holes	N	4	4	4	8	8	8	8	8	12	12	12	16
Height of sensor casing	H1	75	88	125	125	145	145	195	195	270	305	365	406
Total height	H2	267	289	315	322	342	355	392	415	478	514	585	632
Weight (kg)		5.3	7	7.1	7.7	9	12.3	16.4	23.6	31	43.4	74.2	94.2

Remarks:
For DN15~DN80、DN350~DN500, the lining protective ring is 2mm, so the total length of the flow meter shall be increased by L+4mm. For DN100~DN300, the lining protective ring is 0.5mm, so the total length of the flow meter shall be increased by L+1mm; total length (L) tolerance is ±3mm, total height (H2) tolerance is ±5mm

APPEARANCE AND DIMENSION AND FLANGE CONNECTION DIMENSION STANDARD TYPE

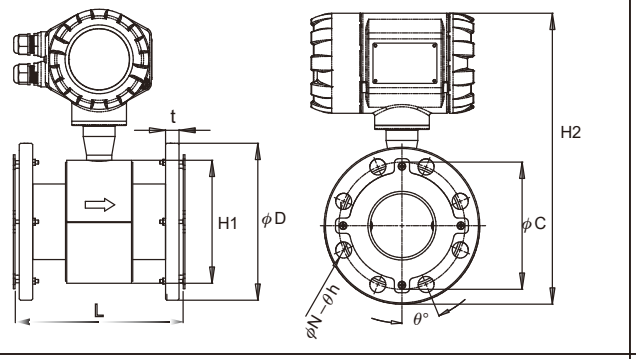

DN50~80

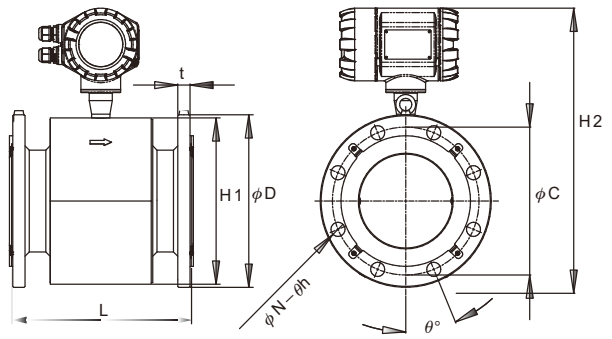

DN100~500

Connection specification		JIS 7.5K										
Nominal diameter(mm)		50	80(75)	100	150	200	250	300	350	400	450	500
Lining material		PTFE										
Length	L	200	200	250	300	350	400	500	500	600	600	600
External diameter	ϕD	186	211	238	290	342	410	464	530	582	652	706
PCD	ϕC	143	168	195	247	299	360	414	472	524	585	639
Flange thickness	t	16	18	18	20	21	23	26	26	26	28	28
Inclined angle of screw hole	θ°	45	45	45	30	22.5	22.5	18	18	15	15	15
Diameter of screw hole	θh	19	19	19	19	19	21	21	24	24	28	28
Quantity of screw holes	N	4	4	4	6	8	8	10	10	12	12	12
Height of sensor casing	H1	125	145	195	270	305	365	406	470	530	580	630
Total height	H2	338	360	399	472	511	577	625	693	747	783	832
Weight (kg)		7.7	12.5	15.8	25.6	36.8	55.6	75	--	--	--	--

Remarks:
For DN15~DN80、DN350~DN500, the lining protective ring is 2mm, so the total length of the flow meter shall be increased by L+4mm. For DN100~DN300, the lining protective ring is 0.5mm, so the total length of the flow meter shall beincreased by L+1mm; total length (L) tolerance is ±3mm, total height (H2) tolerance is ±5mm

APPEARANCE AND DIMENSION AND FLANGE CONNECTION DIMENSION STANDARD TYPE

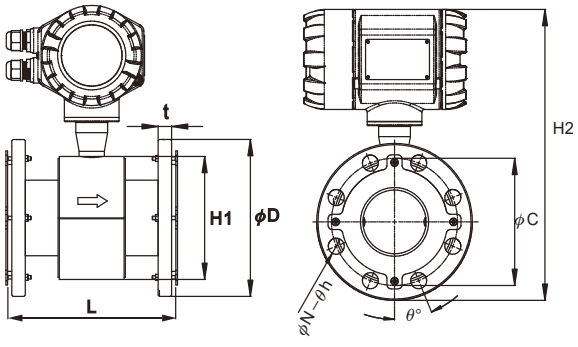

DN15~80

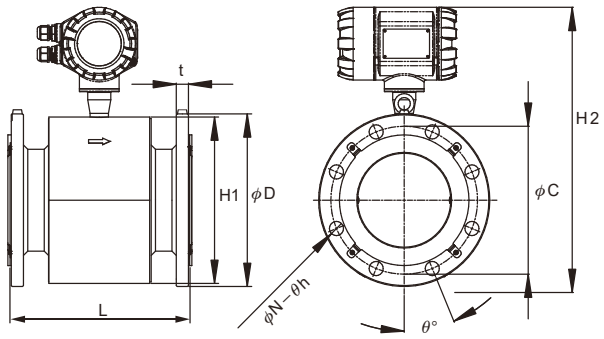

DN100~500

Connection specification		ANSI 150Lbs															
Nominal diameter(mm)		15	25	40	50	65	80	100	125	150	200	250	300	350	400	450	500
Lining material		PTFE															
Length	L	200	200	200	200	200	200	250	250	300	350	400	500	500	600	600	600
External diameter	ϕD	89	108	127	152	178	190	229	254	279	343	406	483	533	597	635	699
PCD	ϕC	60	79	98	121	140	152	191	216	241	298	362	432	476	540	578	635
Flange thickness	t	10	13	16	17	21	22	22	22	24	27	29	30	33	35	38	41
Inclined angle of screw hole	θ°	45	45	45	45	45	45	22.5	22.5	22.5	22.5	15	15	15	11.25	11.25	9.0
Diameter of screw hole	θh	16	16	16	19	19	19	19	22	22	22	25	25	29	29	32	32
Quantity of screw holes	N	4	4	4	4	4	4	8	8	8	8	12	12	12	16	16	20
Height of sensor casing	H1	75	89	125	125	145	145	195	195	265	305	365	406	470	530	580	630
Total height	H2	264	281	308	321	344	350	394	407	464	511	575	633	695	754	797	851
Weight (kg)		4.6	6.1	6.5	8.3	10.8	12.3	17.8	21	27	44.2	67.2	99.6	124.8	152.9	--	--

Connection specification		ANSI 300Lbs															
Nominal diameter(mm)		15	25	40	50	65	80	100	125	150	200	250	300	350	400	450	500
Lining material		PTFE															
Length	L	200	200	200	200	200	200	250	250	300	350	400	500	500	600	600	600
External diameter	ϕD	98	124	156	165	190	210	254	279	318	381	445	521	584	648	711	775
PCD	ϕC	67	89	114	127	149	168	200	235	270	330	387	451	514	572	629	686
Flange thickness	t	13	16	19	21	24	27	30	33	35	40	46	49	52	56	59	62
Inclined angle of screw hole	θ°	45	45	45	22.5	22.5	22.5	22.5	22.5	15	15	11.25	11.25	9.0	9.0	7.5	7.5
Diameter of screw hole	θh	16	19	22	19	22	22	22	22	22	25	29	32	32	35	35	35
Quantity of screw holes	N	4	4	4	8	8	8	8	8	12	12	16	16	20	20	24	24
Height of sensor casing	H1	75	88	125	125	145	145	195	195	265	305	365	406	470	530	580	630
Total height	H2	269	288	323	327	350	360	407	419	481	528	592	650	718	778	832	886
Weight (kg)		5.1	7.3	9.1	10.3	12.8	16.5	26.6	33	43.8	69.2	100.4	146.6	--	--	--	--

Remarks:
For DN15~DN80、DN350~DN500, the lining protective ring is 2mm, so the total length of the flow meter shall be increased by L+4mm. For DN100~DN300, the lining protective ring is 0.5mm, so the total length of the flow meter shall be increased by L+1mm; total length (L) tolerance is ±3mm, total height (H2) tolerance is ±5mm

APPEARANCE AND DIMENSION AND FLANGE CONNECTION DIMENSION STANDARD TYPE

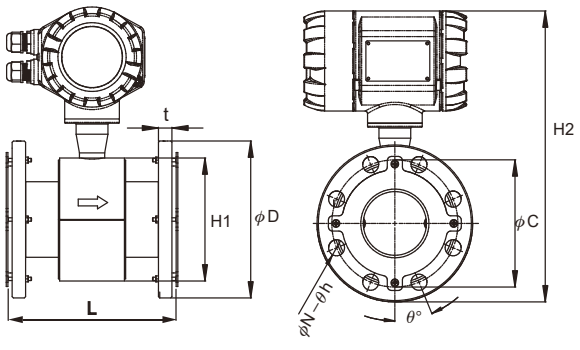

DN15~80

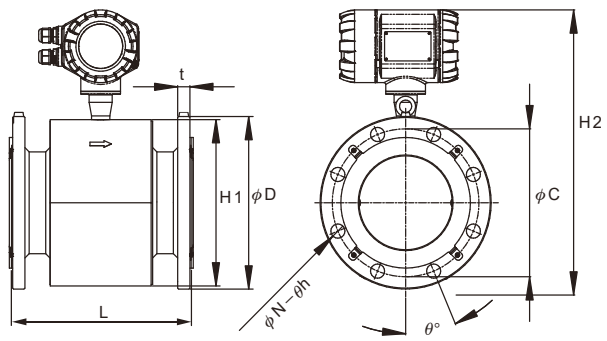

DN100~500

Connection specification		DIN PN40						DIN PN16					
Nominal diameter(mm)		15	25	40	50	65	80	65	80	100	125	150	200
Lining material		PTFE											
Length	L	200	200	200	200	200	200	200	200	250	250	300	350
External diameter	φD	95	115	150	165	185	200	185	200	220	250	285	340
PCD	φC	65	85	110	125	145	160	145	160	180	210	240	295
Flange thickness	t	18	18	18	20	22	24	18	20	20	22	22	24
Inclined angle of screw hole	θ°	45	45	45	45	22.5	22.5	45	22.5	22.5	22.5	22.5	15
Diameter of screw hole	θh	14	14	18	18	18	18	18	18	18	18	22	22
Quantity of screw holes	N	4	4	4	4	8	8	4	8	8	8	8	12
Height of sensor casing	H1	76	89	125	125	145	145	145	145	195	195	265	265
Total height	H2	268	284	320	327	347	355	347	355	390	405	467	490
Weight (kg)		5.2	7.1	7.1	7.7	9	12.3	8.6	11.7	15.6	21	28.2	40

Connection specification		DIN PN10						
Nominal diameter(mm)		200	250	300	350	400	450	500
Lining material		PTFE						
Length	L	350	400	500	500	600	600	600
External diameter	φD	340	395	445	490	565	615	670
PCD	φC	295	350	400	460	515	565	620
Flange thickness	t	24	26	26	28	32	38	38
Inclined angle of screw hole	θ°	22.5	15	15	11.25	11.25	9	9
Diameter of screw hole	θh	22	22	22	22	26	26	26
Quantity of screw holes	N	8	12	12	16	16	20	20
Height of sensor casing	H1	305	365	406	470	530	580	630
Total height	H2	516	570	616	675	740	788	838
Weight (kg)		33.2	54	69.6	88.4	109.3	--	--

Remarks:
For DN15~DN80、DN350~DN500, the lining protective ring is 2mm, so the total length of the flow meter shall be increased by L+4mm. For DN100~DN300, the lining protective ring is 0.5mm, so the total length of the flow meter shall be increased by L+1mm; total length (L) tolerance is ±3mm, total height (H2) tolerance is ±5mm

APPEARANCE AND DIMENSION AND FLANGE CONNECTION DIMENSION REMOTE TYPE

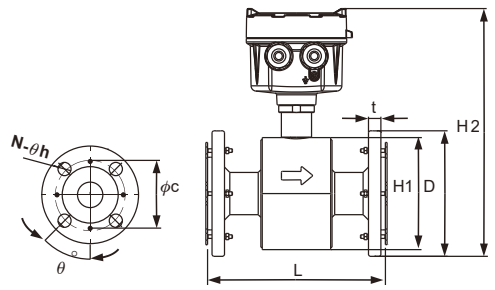

DN15~80

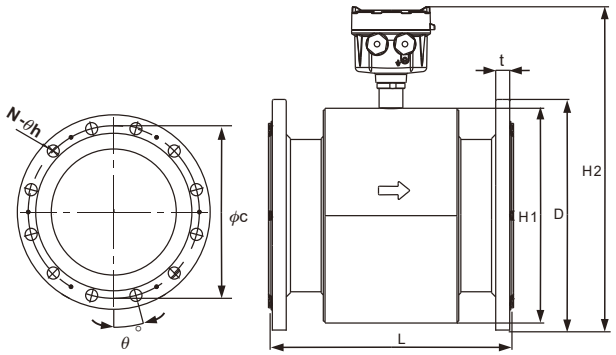

DN100~500

Connection specification		JIS 10K															
Nominal diameter(mm)		15	25	40	50	65	80	100	125	150	200	250	300	350	400	450	500
Lining material		PTFE															
Length	L	200	200	200	200	200	200	250	250	300	350	400	500	500	600	600	600
External diameter	φD	95	125	140	155	175	185	210	250	280	330	400	445	490	560	620	675
PCD	φC	70	90	105	120	140	150	175	210	240	290	355	400	445	510	565	620
Flange thickness	t	12	14	16	16	18	18	18	20	22	22	24	24	26	28	30	30
Inclined angle of screw hole	θ°	45	45	45	45	45	22.5	22.5	22.5	22.5	15	15	11.25	11.25	11.25	9	9
Diameter of screw hole	θh	15	19	19	19	19	19	19	23	23	23	25	25	25	27	27	27
Quantity of screw holes	N	4	4	4	4	4	8	8	8	8	12	12	16	16	16	20	20
Height of sensor casing	H1	75	88	125	125	145	145	195	195	270	305	365	406	470	530	580	630
Total height*1	H2	229	250	276	284	304	309	346	366	429	468	534	578	637	699	752	802
Weight (kg)*2		3.4	5.3	5.3	6.1	7.4	8.3	11.4	16	22	31.7	52.5	68	86.8	107.7	--	--

Connection specification		JIS 20K											
Nominal diameter(mm)		15	25	40	50	65	80	100	125	150	200	250	300
Lining material		PTFE											
Length	L	200	200	200	200	200	200	250	250	300	350	400	500
External diameter	φD	95	125	140	155	175	200	225	270	305	350	430	480
PCD	φC	70	90	105	120	140	160	185	225	260	305	380	430
Flange thickness	t	14	16	18	18	20	22	24	26	28	30	34	36
Inclined angle of screw hole	θ°	45	45	45	22.5	22.5	22.5	22.5	22.5	15	15	15	11.25
Diameter of screw hole	θh	15	19	19	19	23	23	23	25	25	25	27	27
Quantity of screw holes	N	4	4	4	8	8	8	8	8	12	12	12	16
Height of sensor casing	H1	75	88	125	125	145	145	195	195	270	305	365	406
Total height*1	H2	229	250	276	284	304	316	354	376	440	476	547	594
Weight (kg)*2		3.8	5.5	5.5	6.2	7.4	10.7	14.9	22	29.5	41.8	72.7	92.6

Remarks:

*1: For DN15~DN80、DN350~DN500, the lining protective ring is 2mm, so the total length of the flow meter shall be increased by L+4mm. For DN100~DN300, the lining protective ring is 0.5mm, so the total length of the flow meter shall be increased by L+1mm; total length (L) tolerance is ±3mm, τotal height (H2) tolerance is ±5mm

*2: To shows the weight of transducer only. Not include the weight of transmitter 2.06kg

APPEARANCE AND DIMENSION AND FLANGE CONNECTION DIMENSION REMOTE TYPE

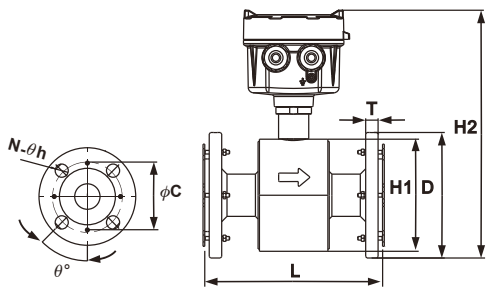

DN50~80

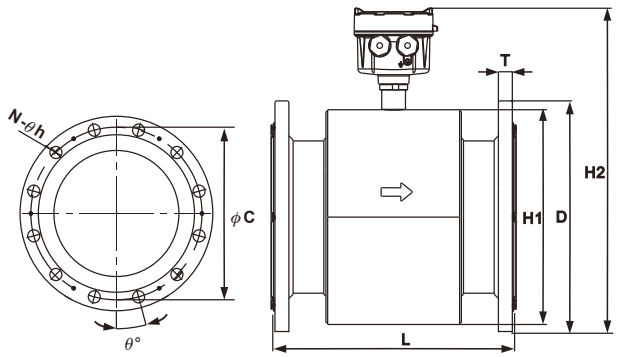

DN100~500

Connection specification		JIS 7.5K										
Nominal diameter(mm)		50	80(75)	100	150	200	250	300	350	400	450	500
Lining material		PTFE										
Length	L	200	200	250	300	350	400	500	500	600	600	600
External diameter	ϕD	185	211	238	290	342	410	464	530	582	652	706
PCD	ϕC	143	168	195	247	299	360	414	472	524	585	639
Flange thickness	t	16	18	18	20	21	23	26	26	26	28	28
Inclined angle of screw hole	θ°	45	45	45	30	22.5	22.5	18	18	15	15	15
Diameter of screw hole	θh	19	19	19	19	19	21	21	24	24	28	28
Quantity of screw holes	N	4	4	4	6	8	8	10	10	12	12	12
Height of sensor casing	H1	125	145	195	270	305	365	406	470	530	580	630
Total height*1	H2	299	322	360	433	473	538	587	655	709	767	817
Weight (kg)*2		7.7	10.9	14.3	24.1	35.3	54.1	73.4	--	--	--	--

Remarks:

*1: For DN15~DN80、DN350~DN500, the lining protective ring is 2mm, so the total length of the flow meter shall be increased by L+4mm. For DN100~DN300, the lining protective ring is 0.5mm, so the total length of the flow meter shall be increased by L+1mm; total length (L) tolerance is ±3mm, τotal height (H2) tolerance is ±5mm

*2: To shows the weight of transducer only. Not include the weight of transmitter 2.06kg

APPEARANCE AND DIMENSION AND FLANGE CONNECTION DIMENSION REMOTE TYPE

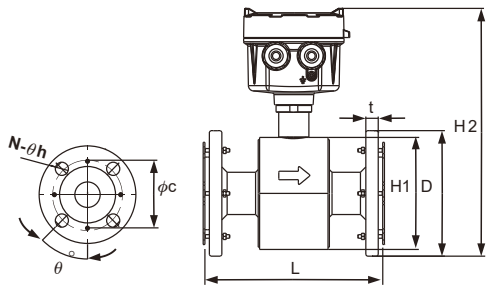

DN15~80

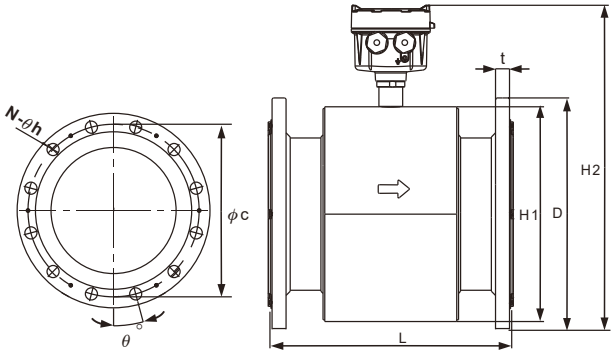

DN100~500

Connection specification		ANSI 150 Lbs															
Nominal diameter(mm)		15	25	40	50	65	80	100	125	150	200	250	300	350	400	450	500
Lining material		PTFE															
Length	L	200	200	200	200	200	200	250	250	300	350	400	500	500	600	600	600
External diameter	ϕD	89	108	127	152	178	190	229	254	279	343	406	483	533	597	635	699
PCD	ϕC	60	79	99	121	140	152	191	216	241	298	362	432	476	540	578	635
Flange thickness	t	10	13	16	17	21	22	22	22	24	27	29	30	33	35	38	41
Inclined angle of screw hole	θ°	45	45	45	45	45	45	22.5	22.5	22.5	22.5	15	15	15	11.25	11.25	9
Diameter of screw hole	θh	16	16	16	19	19	19	19	22	22	22	25	25	29	29	32	32
Quantity of screw holes	N	4	4	4	4	4	4	8	8	8	8	12	12	12	16	16	20
Height of sensor casing	H1	76	89	125	125	145	145	195	195	265	305	365	406	470	530	580	630
Total height*1	H2	227	242	270	282	305	311	356	368	426	473	537	595	657	716	759	851
Weight (kg)*2		4.6	6.1	4.9	6.8	9.2	10.7	16.3	19.4	25.5	42.6	65.7	98	123.2	151.3	--	--

Connection specification		ANSI 300 Lbs															
Nominal diameter(mm)		15	25	40	50	65	80	100	125	150	200	250	300	350	400	450	500
Lining material		PTFE															
Length	L	200	200	200	200	200	200	250	250	300	350	400	500	500	600	600	600
External diameter	ϕD	98	124	156	165	190	210	254	279	318	381	445	521	584	648	711	775
PCD	ϕC	67	89	114	127	149	168	200	235	270	330	387	451	514	572	629	686
Flange thickness	t	13	16	19	21	24	27	30	33	35	40	46	49	52	56	59	62
Inclined angle of screw hole	θ°	45	45	45	22.5	22.5	22.5	22.5	22.5	15	15	11.25	11.25	9	9	7.5	7.5
Diameter of screw hole	θh	16	19	22	19	22	22	22	22	22	25	29	32	32	35	35	35
Quantity of screw holes	N	4	4	4	8	8	8	8	8	12	12	16	16	20	20	24	24
Height of sensor casing	H1	76	89	125	125	145	145	195	195	265	305	365	406	470	530	580	630
Total height*1	H2	231	250	284	289	311	321	368	381	443	490	553	612	680	740	794	886
Weight (kg)*2		5.1	7.3	9.1	10.3	12.8	16.5	26.6	33	42.3	67.6	98.9	145	--	--	--	--

Remarks:

*1: For DN15~DN80、DN350~DN500, the lining protective ring is 2mm, so the total length of the flow meter shall be increased by L+4mm. For DN100~DN300, the lining protective ring is 0.5mm, so the total length of the flow meter shall be increased by L+1mm; total length (L) tolerance is ±3mm, τotal height (H2) tolerance is ±5mm

*2: To shows the weight of transducer only. Not include the weight of transmitter 2.06kg

APPEARANCE AND DIMENSION AND FLANGE CONNECTION DIMENSION REMOTE TYPE

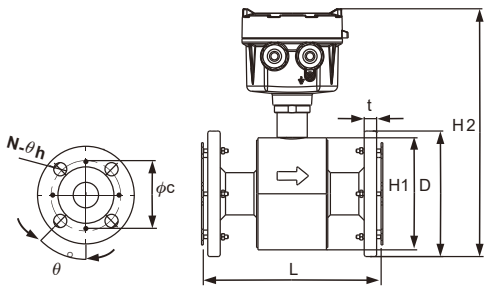

DN15~80

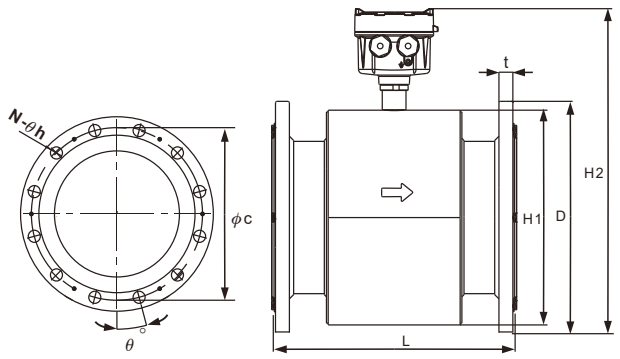

DN100~500

Connection specification		DIN PN40						DIN PN16					
Nominal diameter(mm)		15	25	40	50	65	80	65	80	100	125	150	200
Lining material		PTFE											
Length	L	200	200	200	200	200	200	200	200	250	250	300	350
External diameter	ϕD	95	115	150	165	185	200	185	200	220	250	285	340
PCD	ϕC	65	85	110	125	145	160	145	160	180	210	240	295
Flange thickness	t	18	18	18	20	22	24	18	20	20	22	22	24
Inclined angle of screw hole	θ°	45	45	45	45	22.5	22.5	45	22.5	22.5	22.5	22.5	15
Diameter of screw hole	θh	14	14	18	18	18	18	18	18	18	18	22	22
Quantity of screw holes	N	4	4	4	4	8	8	4	8	8	8	8	12
Height of sensor casing	H1	76	89	125	125	145	145	145	145	195	195	265	305
Total height*1	H2	230	246	281	289	309	316	309	316	351	366	435	476
Weight (kg)*2		5.2	7.2	5.5	6.2	7.4	10.7	7	10.1	14.1	19.4	26.7	38.4

Connection specification		DIN PN10						
Nominal diameter(mm)		200	250	300	350	400	450	500
Lining material		PTFE						
Length	L	350	400	500	500	600	600	600
External diameter	ϕD	340	395	445	490	565	615	670
PCD	ϕC	295	350	400	460	515	565	620
Flange thickness	t	24	26	26	28	32	38	38
Inclined angle of screw hole	θ°	22.5	15	15	11.25	11.25	9	9
Diameter of screw hole	θh	22	22	22	22	26	26	26
Quantity of screw holes	N	8	12	12	16	16	20	20
Height of sensor casing	H1	305	365	406	470	530	580	630
Total height*1	H2	476	534	603	637	701	750	800
Weight (kg)*2		31.7	52.5	68	86.8	107.7	--	--

Transmitter Dimension

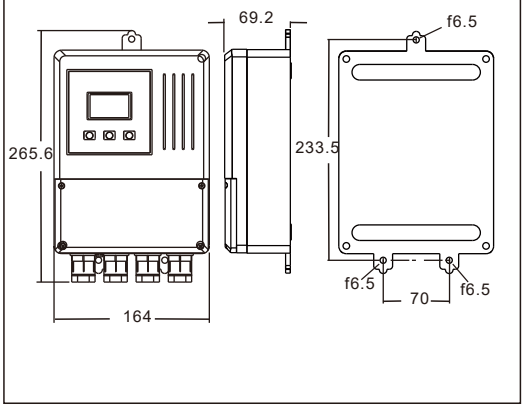

Remarks:
*1: For DN15~DN80、DN350~DN500, the lining protective ring is 2mm, so the total length of the flow meter shall be increased by L+4mm. For DN100~DN300, the lining protective ring is 0.5mm, so the total length of the flow meter shall be increased by L+1mm; total length (L) tolerance is ±3mm, τotal height (H2) tolerance is ±5mm
*2: To shows the weight of transducer only. Not include the weight of transmitter 2.06kg

PIPE DIAMETER, FLOW RANGE AND ACCURACY SELECTION

Pipe diameter (mm)	Flow range (m^3/h)	
	Flowing speed 0.1~1.0m/s	Flowing speed 1.0~10m/s
15	0.06~0.64	0.64~6.4
25	0.17~1.77	1.77~17.7
40	0.45~4.5	4.5~45.2
50	0.71~7.1	7.1~71
65	1.19~11.9	11.9~119
80	1.81~18.1	18.1~181
100	2.83~28.3	28.3~283
125	4.42~44.2	44.2~442
150	6.36~63.6	63.6~636
200	11.3~113	113~1130
250	17.7~177	177~1770
300	25.4~254	254~2540
350	34.6~346	346~3460
400	45.2~452	452~4520
450	57.2~572	572~5720
500	70.7~707	707~7070

DN	Q4	Q3	Q2	Q1
(mm)	(m^3/h)	(m^3/h)	(m^3/h)	(m^3/h)
15	8	6.3	0.06*1	0.04*1
25	20	16	0.16	0.10*1
40	50	40	0.40	0.25
50	78.75	63	0.63	0.394
65	125	100	1.01	0.63
80	200*2	160	1.60	1.00
100	313*2	250*2	2.52	1.57
125	500	400	4.00*3	2.50*3
150	788	630	6.31	3.94*3
200	1250	1000	10.00	6.25
250	2000*4	1600*4	16.00	10.00
300	3125*4	2500*4	25.01	15.63
350	5000*4	4000*4	40.00	25.00
400	5000*4	4000*4	40.00	25.00
450	7875*4	6300*4	63.00	39.38
500	7875*4	6300*4	63.00	39.38

*1: Result is tested under flow rate 0.11 m^3/h
*2: Result is tested under flow rate 190 m^3/h
*3: Result is tested under flow rate 4.4 m^3/h
*4: Result is tested under flow rate 1530 m^3/h

OIML Accuracy class & tolerance

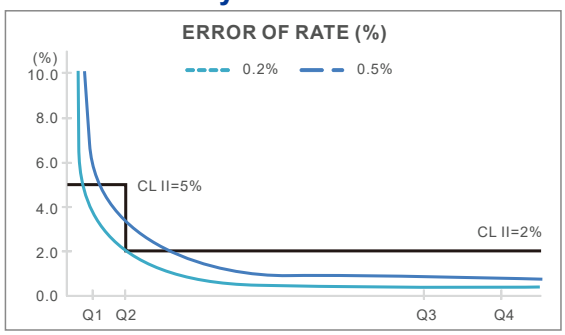

Type	EPD 3x					
DN	50	80	100	150	200	250
Q_3/Q_1 *	160	160	160	160	160	160
Q_2/Q_1	1.6	1.6	1.6	1.6	1.6	1.6
Q_1(m^3/h)	0.394	1	1.57	3.94	6.25	10
Q_2(m^3/h)	0.63	1.6	2.52	6.31	10	16
Q_3(m^3/h)	63	160	250	630	1000	1600
Q_4(m^3/h)	78.75	200	313	788	1250	2000

※ Electromagnetic flowmeter cpmplying with OIML R49 2013/2024 standard, straight pipe requirement:U0D0

INSTALLATION INSTRUCTIONS

1. The flow meter must be free from strong electromagnetic field. The magnetic intensity of the flow meter installation site must be smaller than 400A/m (It should not be installed near large motors or transformers).
2. It should be installed at the lower point and the vertically upward point of the horizontal pipe. Don't install it at the highest point and the vertically downward point of the pipe.

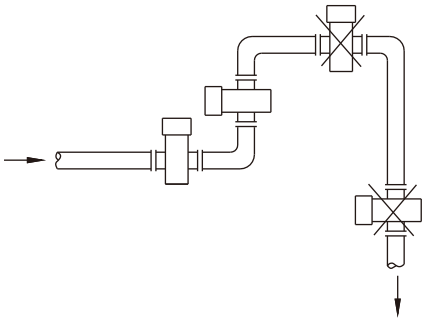

3.It should be installed at the rising point of the pipe.



4. It should be installed at the lower point of the pipe when it is installed on the pipe with opening for drainage.

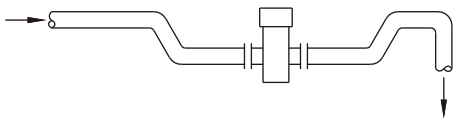

5.If the pipe gap exceeds 5m, the air release valve should be installed at the downstream of the sensor. The downstream of the sensor should have some back pressure.

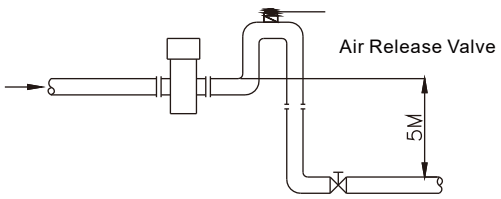

6.The control valve and cut valve should be installed at the downstream of the sensor rather than the upstream.

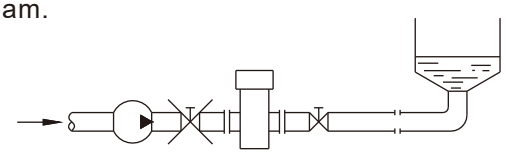

7. The sensor should be installed at the pump outlet rather than the inlet.

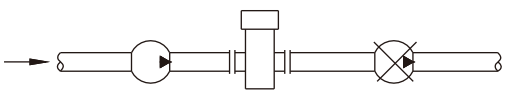

8. The fluidic must flow towards the arrow direction of the flow meter.
9.The axial line of the measuring electrode must be approximate to the horizontal direction (The angle of from the horizontal direction).
10.The measuring pipe must be completely filled with liquid.

INSTALLATION INSTRUCTIONS

11. The straight tube section is required to be at least 5D (internal diameter of the flow meter) on the front side, and at least 2D on the rear side.

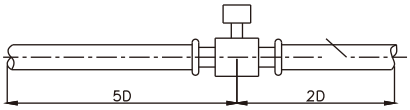

12. When measuring the mixture of different media, the distance between the mixing point and the flow meter must be 30D at least.

13.For convenient cleaning and maintenance of the flow meter, a bypass pipe must be installed.

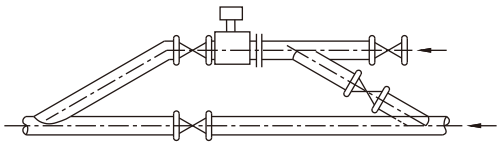

14.When installing the sensor, it should ensure that the measuring pipe and the process pipe must be on the same axial line. For the flow meter with the pipe meter of 50mm or below, the axial line deviation should not exceed 2mm. For those of DN65□DN150, the axial line deviation should not exceed 3mm. For those of ≥DN20**0**, the axial line deviation should not exceed 4mm.

15.The shim installed between the flanges should have excellent anti-corrosion property. The shim should not intrude in the pipe, which will affect the fluidic in the pipe.

16.The sensor and transmitter should be equipped with high-quality independent grounding wire (The section area of the copper core is 1.6mm2). The grounding resistance should be <10Ω. If the grounding is poor, it won't work normally. The grounding ring is needed if the pipe connecting with the sensor is insulating, and the material of the grounding ring should be the same as that of the electrode. If the test medium is abrasive, the neck grounding ring should be selected.

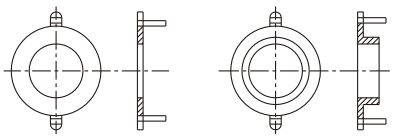

16.1 It is for installing the flow meter on the metal pipe not coated with insulating layer internally.

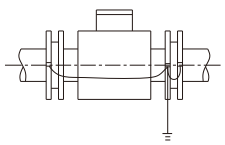

16.2When installing the flow meter on the protective pipe of the cathode, the pipe with the protection of electrolytic corrosion generally has insulating walls and protruding sides. Thus, during installation, the grounding ring and the flanges on the pipe should be insulating.

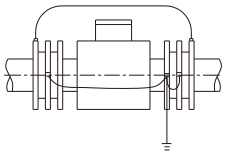

16. When installing the flow mater on the plastic pipe or the pipe with insulating coating material, paints or lining, grounding rings on both ends of the sensor should be installed.

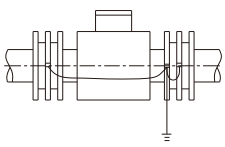

MODEL NUMBER / ORDER CODE COMPARISON TABLE
ORDERING INFORMATION

Model Number	Order Code
EPD30	EPD10000-A
EPD34	EPD10400-A

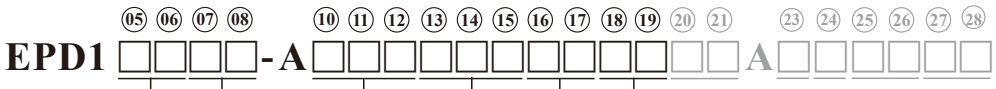

⑤⑥ Type

00: Integrated type
04: Remote type

⑦⑧ Certification

00: None
2F: IECEx (For Integrated type only)
6F: CSA (For Integrated type only)
ML: OIML R49

(Next page)

⑩⑪⑫ Pipe diameter

015: 15mm	100: 100mm	350: 350mm
025: 25mm	125: 125mm	400: 400mm
040: 40mm	150: 150mm	450: 450mm
050: 50mm	200: 200mm	500: 500mm
065: 65mm	250: 250mm	
080: 80mm	300: 300mm	

⑬⑭⑮ Connection specification

C48: ANSI B16.5 Class 150	D57: DIN 2501 PN10
C49: ANSI B16.5 Class 300	D58: DIN 2501 PN16
A41: JIS B2220 7.5K	D60: DIN 2501 PN40
A42: JIS B2220 10K	
A45: JIS B2220 20K	

⑯⑰ Casing and flange

MD: Carbon steel
MA: SUS304
MC: SUS316L

⑱⑲ Lining material

08: Neoprene (Min. DN40)
21: PTFE (Min. DN15)(Accuracy of 0.2% and 0.3% can only be achieved using PTFE material)
37: NBR (Min. DN40)

ORDERING INFORMATION



⑳㉑ Electrode material

MC: SUS316L
MF: Titanium
MK: Tantalum
MJ: Hastelloy alloy(C-276)

㉓ Power supply

(Ex-proof type support 24VDC only, D/R)

A: 100~240VAC, 50/60Hz
D: 24VDC
N: 100~240VAC,50/60Hz with data logger
R: 24VDC with data logger

㉔ Accuracy

F: 0.5%
G: 0.3%
H: 0.2%

㉕㉖ Grounding material

00: None
MA: SUS304
MC: SUS316L
MF: Titanium
MK: Tantalum
MJ: Hastelloy alloy(C-276)

㉗㉘ Cable length

00: None(Only available for standard type)
10: 10 M(Remote type standard)
15: 15 M
20: 20 M
⋮
95: 95 M
A0: 100 M

ACCESSORY–GROUNDING RING

New Order Number	Old Order Number
EPDAM1P-MJ03150001	Hastelloy alloy -C276 2.0T, DN15
EPDAM1P-MJ03250001	Hastelloy alloy -C276 2.0T, DN25
EPDAM1P-MF03150001	Titanium 2.0T, DN15
EPDAM1P-MF03250001	Titanium 2.0T, DN25
EPDAM1P-MA03150001	SUS304 2.0T, DN15
EPDAM1P-MA03250001	SUS304 2.0T, DN25
EPDAM1P-MC03150001	SUS316L 2.0T, DN15
EPDAM1P-MC03250001	SUS316L 2.0T, DN25
EPDAM1P-MA03A00002	SUS304 2.0T, DN100
EPDAM1P-MA03A20002	SUS304 2.0T, DN125
EPDAM1P-MB03A50002	SUS304 2.0T, DN150
EPDAM1P-MA03B00002	SUS304 2.0T, DN200
EPDAM1P-MA03B50002	SUS304 2.0T, DN250
EPDAM1P-MA03C00002	SUS304 2.0T, Dn300
EPDBM1P-MC03400001	SUS316L 2.0T, DN40
EPDBM1P-MC03500001	SUS316L 2.0T, DN50
EPDBM1P-MC03650001	SUS316L 2.0T, DN65
EPDBM1P-MC03800001	SUS316L 2.0T, DN80
EPDAM1P-MC03A00002	SUS316L 2.0T, DN100
EPDAM1P-MC03A20002	SUS316L 2.0T, DN125
EPDAM1P-MC03A50002	SUS316L 2.0T, DN150
EPDAM1P-MC03B00002	SUS316L 2.0T, DN200
EPDAM1P-MC03B50002	SUS316L 2.0T, DN250
EPDAM1P-MC03C00002	SUS316L 2.0T, DN300
EPDAM1P-MF03400001	Titanium 2.0T, DN40
EPDAM1P-MF03500001	Titanium 2.0T, DN50
EPDAM1P-MF03650001	Titanium 2.0T, DN65
EPDAM1P-MF03800001	Titanium 2.0T, DN80
EPDAM1P-MF03A00002	Titanium 2.0T, DN100
EPDAM1P-MF03A20002	Titanium 2.0T, DN125
EPDAM1P-MF03A50002	Titanium 2.0T, DN150
EPDAM1P-MF03B00002	Titanium 2.0T, DN200
EPDAM1P-MJ03400001	Hastelloy alloy -C276 2.0T, DN40
EPDAM1P-MJ03500001	Hastelloy alloy-C276 2.0T, DN50
EPDAM1P-MJ03650001	Hastelloy alloy-C276 2.0T, DN65
EPDAM1P-MJ03800001	Hastelloy alloy-C276 2.0T, DN80
EPDAM1P-MJ03A00002	Hastelloy alloy-C276 2.0T, DN100

ACCESSORY–GROUNDING RING

New Order Number	Old Order Number
EPDAM1P-MJ03A20002	Hastelloy alloy-C276 2.0T, DN125
EPDAM1P-MJ03A50002	Hastelloy alloy-C276 2.0T, Dn150
EPDAM1P-MJ03B00002T	Hastelloy alloy-C276 2.0T, DN200
EPDAM1P-MJ03B50002	Hastelloy alloy-C276 2.0T, DN250
EPDAM1P-MJ03C00002	Hastelloy alloy-C276 2.0T, DN300
EPDAM1P-MK03800001	Tantalum 2.0T, DN80

ACCESSORY–GROUNDING RING

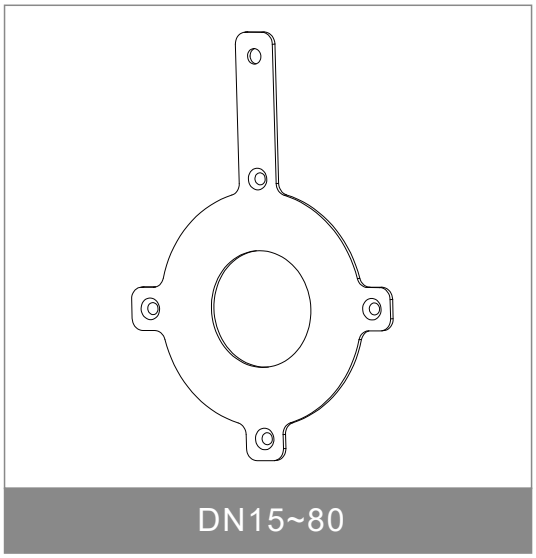

DN15~80

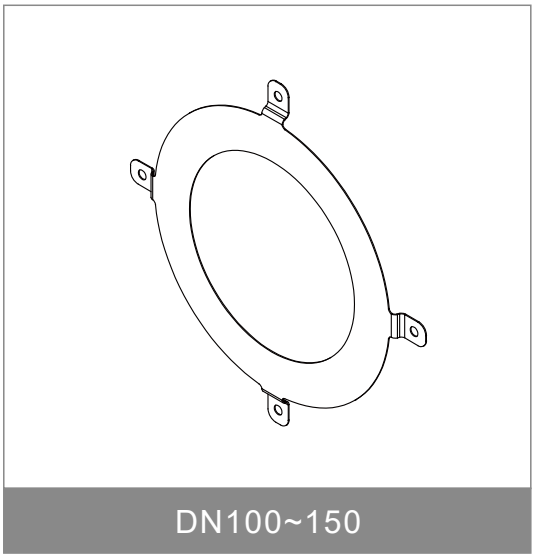

DN100~150

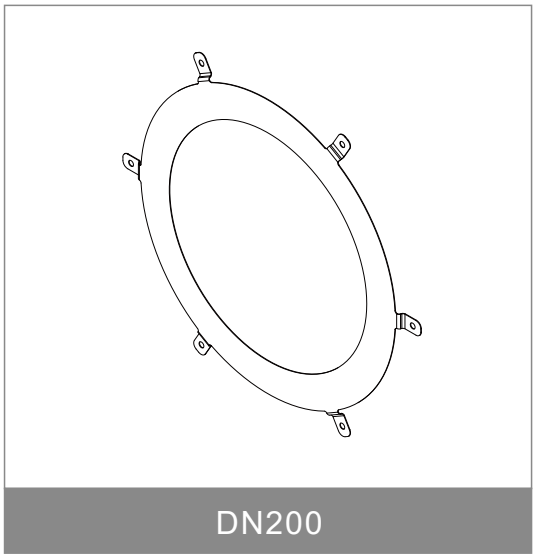

DN200

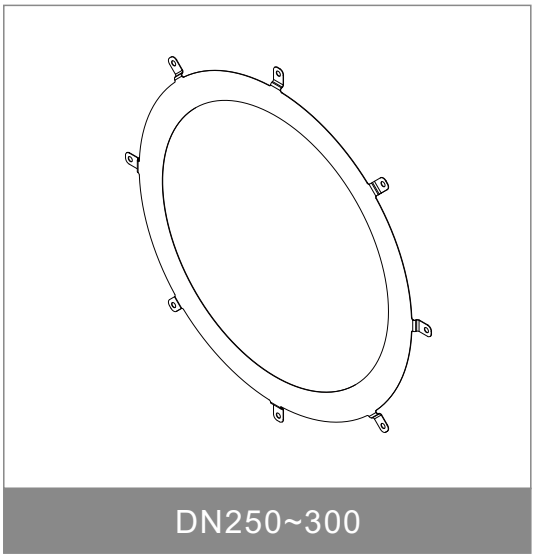

DN250~300

SETTING VALUES

Main Menu	Sub Menu	Unit	Default	Setting Range
Fast Set(0)	Device Tag Num (1.1)		The paremeter is linking form standard manu	
	Zero Adj. (2.1)			
	Flow Span (1.5)			
	Flow Unit (1.4)			
	Low cutoff (2.4)			
	Damping Time (3.1)			
	Pulse Out Unit (3.3)			
	Total Reset (1.9)			

Main Menu	Sub Menu	Unit	Default	Setting Range
Basic Set (1)	Device Tag Num (1.1)		00001	00001~65535
	Measure Type (1.2)	-	Water	Water
	Tube Size (1.3)	mm	actual	10,15,25,32,40,50,65,80,100 125,150,200,250,300,350,400,450,500
	Flow Unit (1.4)	-	m^3/h	L/(s,min,h), m^3 /(s,min,h), gal/(s,min,h), kg(s,min,h), Ton(s,min,h) (Flow rate* Liquid density = weight) "L/s", "L/m", "L/h", "$m3/^s$ ", "$m3/^m$ ", "$m3/^h$ ", "gal/s", "gal/m", "gal/h", "kg/s", "kg/m", "kg/h", "Ton/s", "Ton/m", "Ton/h", "m3/d"
	Flow Span (1.5)	=Flow Rate Unit	$(5m/s) \times (Diameter/2)^2 \times pi \times$ Unit of Flow Forward	(0.1 ~ 10.0m/s) x (Diametermm/2)2 x pi x Unit of Flow Forward
	Direction (1.6)	dir	Forward	Forward,Reverse
	Total Unit (1.7)	-	m3	Liter,gal,m^3,kg,Ton
	Total Mode (1.8)	none	Forward	Forward,Reverse,Bi-direction
	Total Reset (1.9)	none	Cancel	Cancel,Accept

Main Menu	Sub Menu	Unit	Default	Setting Range
Advanced Set (2)	Zero Adj. (2.1)	m/s	actual	-0.5000~+0.5000
	K-Factor (2.2)	none	1.000	0.000~3.000
	Density (2.3)	g/cm^3	1.0000	0.0001~9.9999
	Low cutoff (2.4)	%	0.5	0.00~100.00
	Fwd. Init. (2.5)	=Total Unit	0	0~9999999999
	Rev. Init.(2.6)	=Total Unit	0	0~9999999999

SETTING VALUES

Main Menu	Sub Menu	Unit	Default	Setting Range
I/O Signal Set (3)	Damping Time (3.1)	second (s)	3	0~100
	Pulse Out Mode (3.2)	none	Pulse NO	Pulse NO, Pulse NC, Frequency
	Pulse Out Unit (3.3)	Unit/pulse	0.1 L	0.001~100(L,gal,m^3,g,kg,Ton) m^3/pulse,gal/pulse,m^3/pulse g/pulse,kg/pulse,Ton/pulse
	Max. Freq. (3.4)	Hz,kHz	2K	1~8K (00.0000)
	Curr. Mode (3.5)	none	4-20	4-20,0-20
	4mA Fine-Tune (3.6)	count	0	-5000~5000
	20mA Fine-Tune (3.7)	count	0	-5000~5000
	Input1 Func. (3.8)	N/A	None	None, Total Reset
	Input1 Type (3.9)	N/A	NO	NO,NC
	Filter Variation (3.10)	m/s	1	0.000~10.000
	Filter Weight (3.11)	%	10	0~100
	Median Filter(3.12)	%	Enable	Disable,Enable

Main Menu	Sub Menu	Unit	Default	Setting Range
Alarm Set (4)	Max. Flow (4.1)	Flow Rate Unit	Max.	Max. Flow Rate
	Min. Flow (4.2)	Flow Rate Unit	Min.	Min. Flow Rate
	Empty Tube Set (4.3)	N/A	Enable	Enable, Disable
	Output 1 Func. (4.4)	N/A	Max. Flow Rate	Max. Flow Rate, Min. Flow Rate, Empty Tube, System Alarm
	Output 1 Type (4.5)	N/A	No	NO,NC
	Output 2 Func. (4.6)	N/A	Min. Flow Rate	Max. Flow Rate, Min. Flow Rate, Empty Tube, System Alarm
	Output 2 Type (4.7)	N/A	No	NO,NC
	Curr. Func. (4.8)	N/A	None	Empty Tube, System Alarm
	Alarm Curr. (4.9)	mA	3.6	3.6,3.8,20.5,22
	Temp. Alarm. (4.10)	N/A	1	0:OFF, 1:ON

SETTING VALUES

Main Menu	Sub Menu		Unit	Default	Setting Range
System Set (5)	Language (5.1)	N/A		English	Traditional Chinese,Simplified Chinese
	System Info.(5.2)	Tube Status	N/A	Actual	(Normal, Empty)
		Act. Flow Speed	m/s	Actual	N/A
		Resistance	kΩ	Actual	N/A
		Status Code	N/A	Actual	0000 0000 ~ FFFF FFFF
	Self-Test (5.3)	N/A	/A	Cancel	Normal, Circuit Fail ,Excitation Fail, Amb. Temp, Electrode Coating
	Analogy Input (5.4)	4mA Display	N/A	0000	0~9999
		20mA Display.	N/A	1000	0~9999
		4-20mA Unit	N/A	Kpa	None, Kpa, Mpa, Psi, Bar,BC, BF
		Dot	N/A	1	0~3
	ModBus Comm. (5.5)	Modbus ID(2.13.1)	/A		~255
		BaudRate(2.13.2)	S		1200,2400,4800,9600,19200 38400,57600
		Data bit(2.13.3)	N/A	8	8
		Parity(2.13.4)	N/A	none	none,odd,even
		Stop bit(2.13.5)	/A		1,2
	Recovery Default (5.6)	N/A	N/A	Cancel	Cancel, Accept
	Mains Frequency (5.7)	N/A	Hz	50	50, 60
	LCM Contrast Brightness(5.8)	N/A	%	50	10~100
	Manu Password (5.9)	User Password(5.9.1) Admin Password(5.9.2)	N/A	00000	0~99999

Main Menu	Sub Menu	Unit	Default	Setting Range
Simulation (6)	Flow Speed (6.1)	m/s	0	-10 ~ 10
	Flow Rate (6.2)	Flow Rate Unit	0	0~max.
	Output Curr. (6.3)	mA	4mA	3.6~22
	Output Freq. (6.4)	Hz(pulse/sec)	2	8000
	Output1 Status (6.5)	N/A	OFF	ON/OFF
	Output2 Status (6.6)	N/A	OFF	ON/OFF
	Input1 Status (6.7)	N/A	Actual	ON/OFF
	Input Curr. (6.8)	N/A	Actual	0~24mA

Main Menu	Sub Menu	Unit	Default	Setting Range
System Log (7)	Date Set (7.1)	N/A	actual	year : 17~99, month : 01~12, day : 01~31
	Time Set (7.2)	N/A	actual	hour : 00~23, minute : 00~59, sec : 00~59
	Log data clear (7.3)	N/A	Cancel	Cancel, Accept
	System Log Info (7.4)	N/A	actual	N/A

Main Menu	Sub Menu	Unit	Default	Setting Range
Infomation (8)	F.W. Version(8.1)		actual	

※Sub menu 1.3、1.9、2.2、2.5、2.6、.6、5.9、7.3, only the admin can change.

APPLICATION DEMO





Pharmaceutical



Pharmacy



Beverage



Electronics



Food & Beverage



Incinerator



Mining



Plastic

TUCHENG PLANT/YILAN PLANT





EPD APPLICATION / ORDER FORM

Company Profile

Company Name: _____ Contact Person: _____

E-mail: _____ Phone: _____ Tax: _____

Application

Medium: _____ Temperature: _____ Sanitary Degree Request:Yes ☐ NO ☐

Conductivity: _____ Viscosity: _____

Diameter of Tube (DN) : _____ Accuracy Request(%): _____ Ambient Temp.: _____

Normal Flow Rate(m^3/h): _____ Max. Flow Rate(m^3/h): _____ Min. Flow Rate(m^3/h): _____

Connection Spec: _____ Connection Material**: _____

Pressure (Kg/cm^2): _____ Max. Static Pressure (Kg/cm^2): _____ **SUS304, SUS316, SUS316L

Lining Material*: _____ Electrode Material***: _____

*PTFE、NBR、Neoprene

***SUS316L,Hastelloy Alloy,Titanium, tantalum

Power: ☐ 110Vac ☐ 220Vac ☐ 24Vdc

Output: ☐ 4-20mA/Pulse(ferq) ☐ RS-485/Modbus

Grounding: ☐ NO ☐ YES

Installation Direction: ☐ Horizontal ☐ Vertical

Vibration Inside Tube: ☐ NO ☐ YES

Strong Magnetic Nearby: ☐ NO ☐ YES

Explosion Proof: ☐ NO ☐ YES

Explosion Proof Code: _____

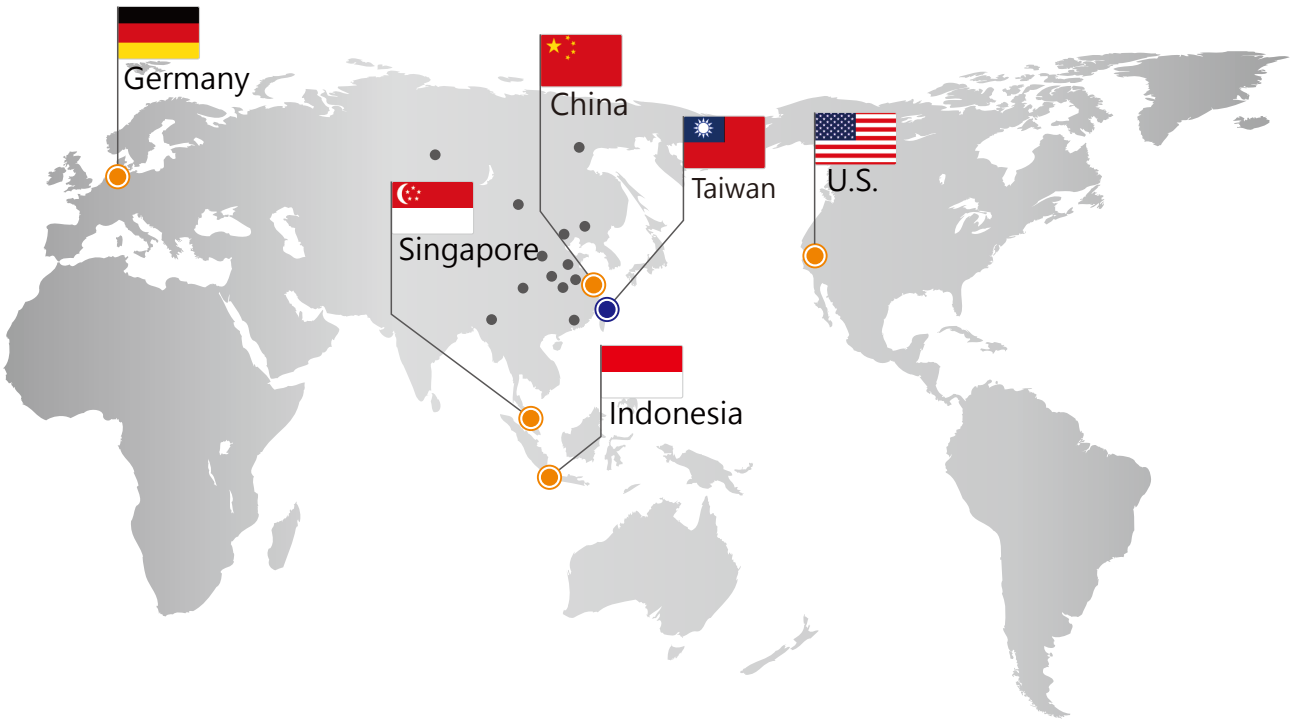

Head Quarter

Taiwan
FineTek Co., Ltd. - Taipei Head Quarter
No.16, Tzuchiang St., Tucheng Industrial Park
New Taipei City 236, Taiwan
TEL: 886-2-2269-6789
FAX: 886-2-2268-6682
EMAIL: info@fine-tek.com

North America

California, U.S.
Aplus Finetek Sensor Inc. - US Office
355 S. Lemon Ave, Suite D
Walnut, CA 91789
TEL: 1 909 598 2488
FAX: 1 909 598 3188
EMAIL: info@aplusfine.com

Europe

Germany
FineTek GmbH - Germany Office
Bei den Kämpen 26
21220 Seevetal-Ramelsloh, Germany
TEL: +49-(0)4185-8083-12
FAX: +49-(0)4185-8083-80
EMAIL: info@fine-tek.de

Mütec Instruments GmbH - Germany Office
Bei den Kämpen 26
21220 Seevetal-Ramelsloh, Germany
TEL: +49-(0)4185-8083-0
FAX: +49-(0)4185-8083-80
EMAIL: muetec@muetec.de

Asia

China
Fine automation Co., Ltd. - Shanghai Factory
No.451 DuHui Rd, MinHang District, Shanghai,
China 201109
TEL: 86-21-6490-7260
EMAIL: info.sh@fine-tek.com

Singapore
FineTek Pte Ltd. - Singapore Office
37 Kaki Bukit Place, Level 4 Singapore 416215
TEL: 65-6452-6340
EMAIL: info.sg@fine-tek.com

Indonesia
PT. FineTek Automation Indonesia - Indonesia Office
PERGUDANGAN TUNAS BITUNG
JL. Raya Serang KM. 13,8, Blok C3 No. 12&15,
Bitung Cikupa, Tangerang 15710
TEL: 62 (021)-2958-1688
EMAIL: info.id@fine-tek.com

FineTek

Distributor: